TI-P610-05
CMGT Issue 11

Airodyn
Compressed Air Drain Trap

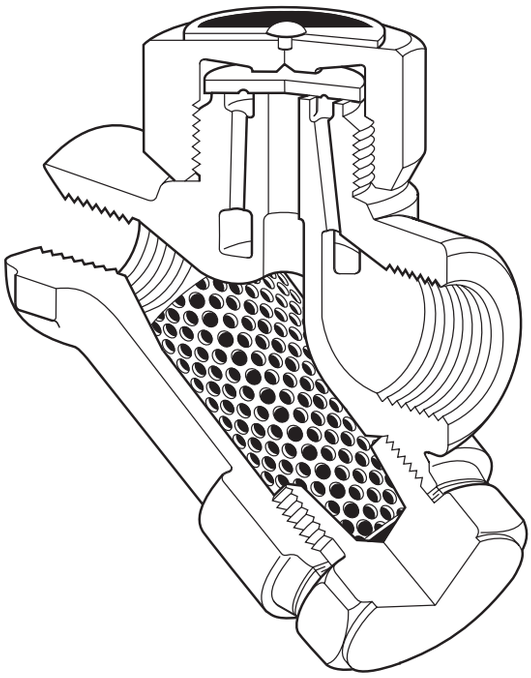

Description
The **Airodyn** is a thermodynamic type compressed air drain trap. The external body surfaces are electroless nickel plated (ENP) which is oxidation resistant.

Operating media
The Airodyn is designed for use on air or gases within PED group 2.

Note: The Airodyn is not suitable for use on PED group 1 liquids or gases.

Optionally

Airodyn S	The Airodyn S has been designed for ultra clean applications. This trap has a fine lap disc (item 3).
Airodyn HD	The Airodyn HD has been designed for particularly oil contaminated air systems.

Standards
This product fully complies with the requirements of the EU Pressure Equipment Directive/UK Pressure Equipment (Safety) Regulations.

Certification
This product is available with certification to EN 10204 3.1.
Note: All certification / inspection requirements must be stated at the time of order placement.

Sizes and pipe connections

Airodyn	½" screwed BSP or NPT ¾" screwed NPT	**Airodyn HD**	½" screwed BSP

Polígono Industrial O Rebullón s/n. 36416 - Mos - España - rodavigo@rodavigo.com

Compressed air products

Isolation valves, drain traps and ancillaries

Pressure/temperature limits

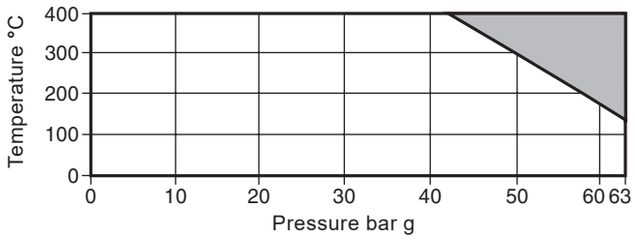

The product **must not** be used in this region.

Body design conditions		PN63
PMA	Maximum allowable pressure	63 bar g @ 120°C
TMA	Maximum allowable temperature	400°C @ 42 bar g
Minimum allowable temperature		0°C
PMO	Maximum operating pressure for saturated steam service	63 bar g @ 120°C
TMO	Maximum operating temperature	400°C @ 42 bar g
Minimum operating temperature		0°C
PMOB	Maximum backpressure should not exceed 80% of the inlet pressure under any conditions of operation otherwise the trap may not shut-off.	
Minimum operating differential pressure for satisfactory operation		0.25 bar
Designed for a maximum cold hydraulic test pressure of:		95 bar g

Materials

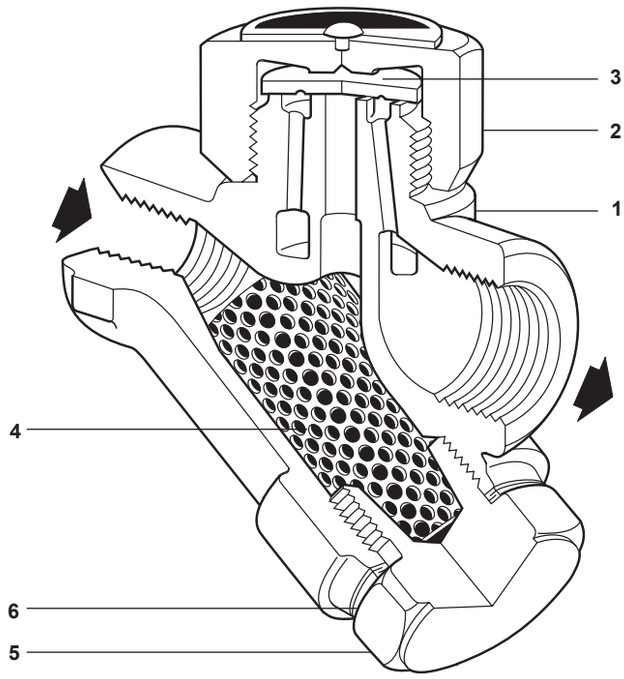

No.	Part	Material	
1	Body	Stainless steel	ASTM A743 Gr. CA40F
2	Cap	Stainless steel	AISI 416
3	Disc	Stainless steel	BS 1449 420 S45
4	Strainer screen	Stainless steel	BS 1449 304 S16
5	Strainer cap	Stainless steel	AISI 416
6	Strainer cap gasket	Stainless steel	BS 1449 304 S16

Compressed air products

Isolation valves, drain traps and ancillaries

Dimensions/weights (approximate) in mm and kg

Size	A	B	E	G	H	Weight
½"	41	78	55	85	20	0.77
¾"	44	85	60	100	20	0.95

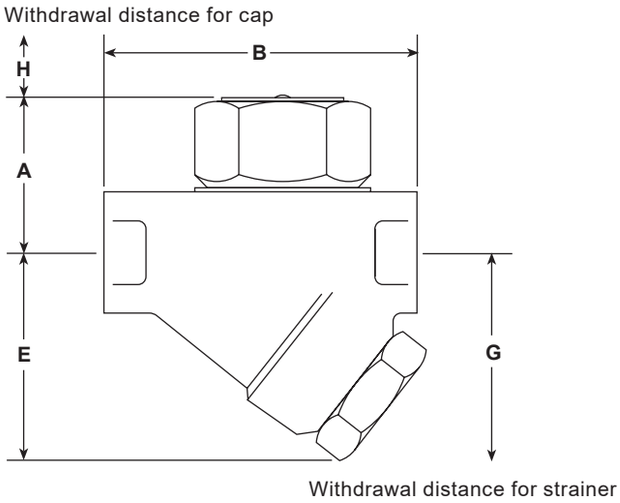

Capacities

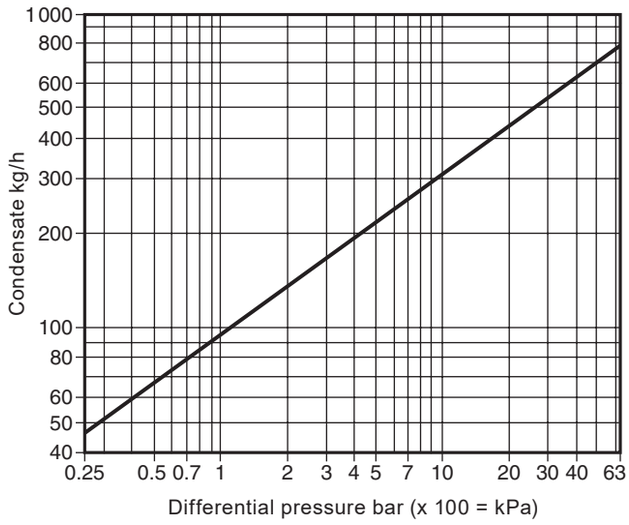

K_v values

Size	½"	¾"
K_v	3.09	3.09

For conversion:
C_v (UK) = K_v x 0.963
C_v (US) = K_v x 1.156

Safety information, installation and maintenance

For full details see the Installation and Maintenance Instructions (IM-S48-06) supplied with the product.

Installation note:

Preferably fitted in a horizontal pipe but can be fitted in vertically downwards pipe.

Operation

One side of the disc (**3**) is plain with a single scribe towards the outer edge, whereas the other side of the disc has a machined circular groove. The Airodyn is supplied with the circular grooved side of the disc towards the seating face and is suitable for clean operating conditions with the exception of the 'HD' version which has been designed for particularly contaminated air system having the scribed disc facing the seat. If the operation conditions are dirty, probably with heavy oil contamination, unscrew the cap, using preferably a ring spanner and turn over the disc so that the plain side with a bleed scribe is towards the seating face. Replace cap - no gasket is required but a suitable high temperature anti-sieze grease should be applied to the threads.

Tighten the cap to the recommended torque. Do not use a wrench of the Stillson type which may distort the cap. In extremely dirty conditions it may be necessary to deepen the bleed scribe or to make additional scribes up to a maximum of 3 thus.
The scribe should be over the area covered by and extending beyond the outer seat face.

Disposal

The product is recyclable. No ecological hazard is anticipated with disposal of this product providing due care is taken.

How to order

Example: 1 off Spirax Sarco ½" screwed BSP Airodyn compressed air drain trap.

Spare parts

The spare parts available are shown in solid outline.
Parts drawn in a grey line are not supplied as spares.

Available spares

Disc (packet of 3)	**3**
Strainer screen and gasket	**4**, **6**
Strainer cap gasket (packet of 3)	**6**

How to order spares

Always order spares by using the desciption given in the column headed 'Available spares' and state the size and type of trap.

Example: 1 - Strainer screen for a Spirax Sarco ½" Airodyn compressed air drain trap.

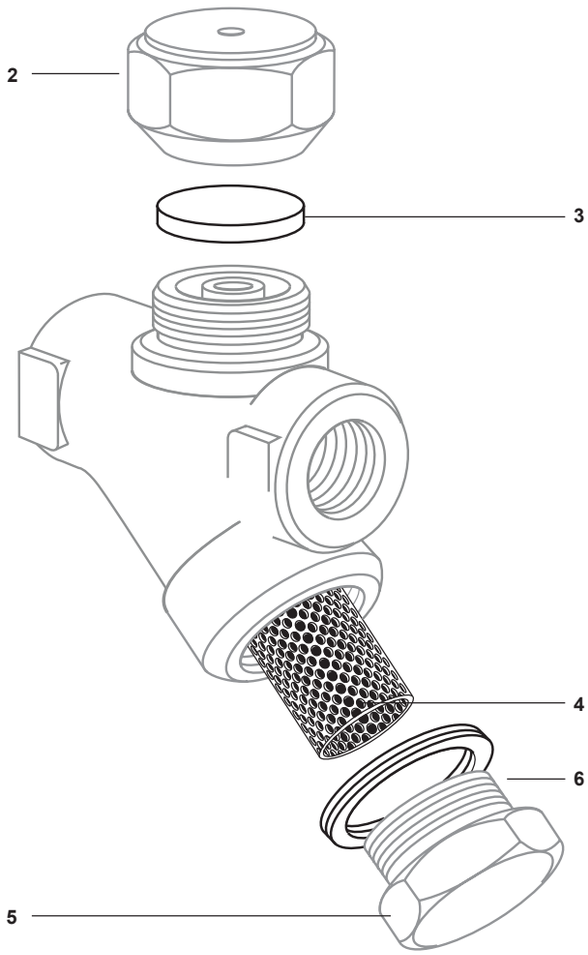

Recommended tightening torques

Item	Part	or mm		N m
2	Cap	36 A/G		150
5	Strainer cap	32 A/F	M28	170 -190

spirax sarco

TI-P610-10
ST Issue 7

BRoil
Compressed Air Drain Trap

Description
The BRoil is a maintainable thermodynamic type compressed air drain trap, specifically designed to remove small quantities of oil contaminated condensate, for use on railway rolling stock.

Standards
This product fully complies with the requirements of the European Pressure Equipment Directive 97/23/EC.

Certification
This product is available with certification to EN 10204 3.1. **Note:** All certification/inspection requirements must be stated at the time of order placement.

Sizes and pipe connections
½" screwed BSP or NPT.

Optional extras
The silencer, complete with elbow and reducer is available as an optional extra.

Pressure/temperature limits

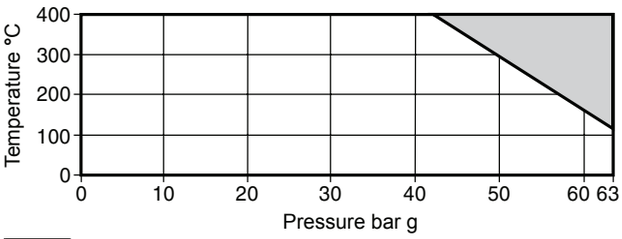

The product **must not** be used in this region.

Body design conditions		PN63
PMA	Maximum allowable pressure	63 bar g
TMA	Maximum allowable temperature	400°C
Minimum allowable temperature		0°C
PMO	Maximum operating pressure	63 bar g
TMO	Maximum operating temperature	400°C
Minimum operating temperature		0°C
PMOB	Maximum backpressure should not exceed 80% of the inlet pressure under any conditions of operation otherwise the trap may not shut-off.	
ΔPMN	Minimum operating differential pressure for satisfactory operation	0.25 bar
Designed for a maximum cold hydraulic test pressure of 95 bar g		

K_V values

Size	½"
K_V	0.25

For conversion: C_V (UK) = K_V x 0.963 C_V (US) = K_V x 1.156

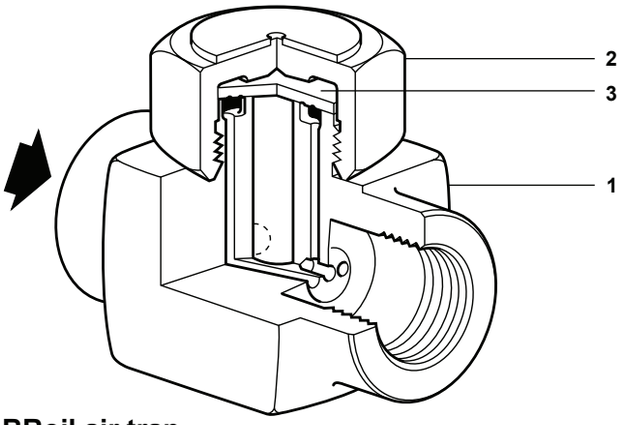

BRoil air trap

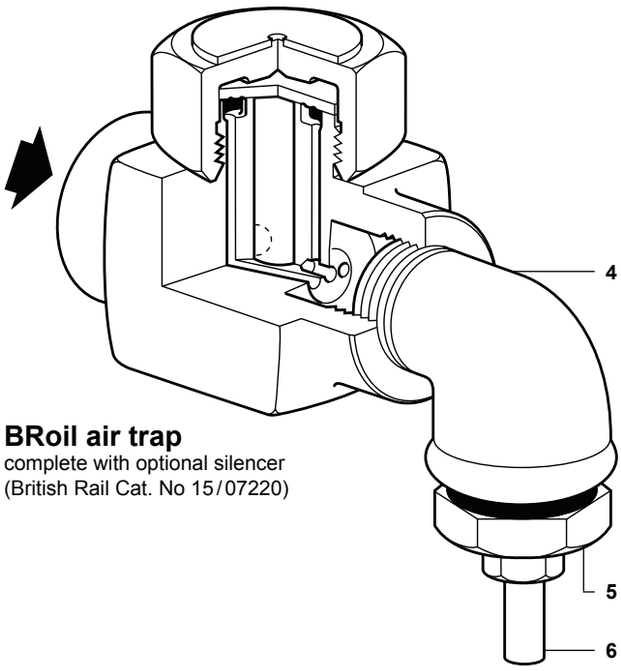

BRoil air trap
complete with optional silencer
(British Rail Cat. No 15/07220)

Materials

No.	Part	Material	
1	Body	Stainless steel	AISI 420 F
2	Cap	Stainless steel	AISI 416
3	Disc	Stainless steel	BS 1449 420 S45
4	Elbow	Malleable iron	Part nos. **4**, **5** and **6** are **optional extras**
5	Reducer and gasket	Brass	
6	Silencer	Brass	

Dimensions / weights (approximate) in mm and kg

Size	A	B	C	D	E	F	Weight (without silencer)	Weight (silencer included)
½"	38	65	15	56	109	40	0.47	0.63

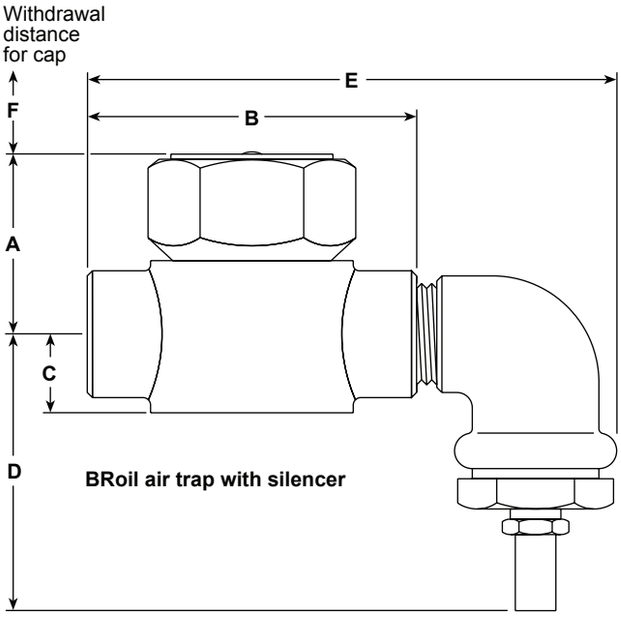

Capacities

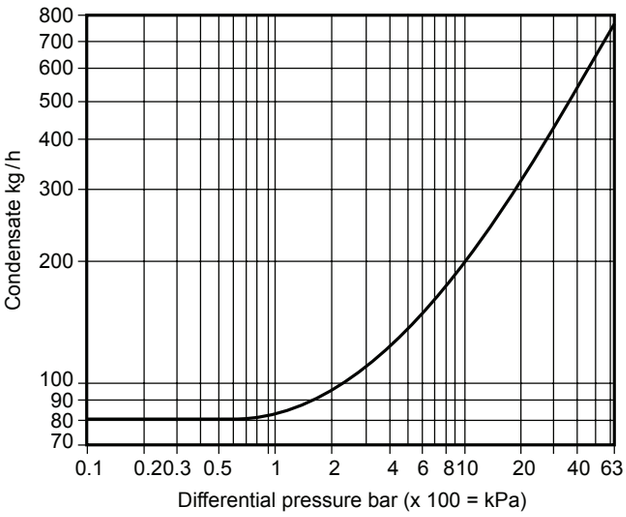

Safety information, installation and maintenance

For full details see the Installation and Maintenance Instructions (IM-S48-06) supplied with the product.

Installation note:
The trap is designed to be installed horizontally. Check the flow direction arrow for the correct orientation.

Disposal
The product is recyclable no ecological hazard is anitcipated with the disposal of this product, providing due care is taken.

How to order

Example: 1 off Spirax Sarco ½" BRoil compressed air drain trap screwed BSP complete with optional elbow and silencer.

Spare parts

The spares parts available are shown in heavy outline. Parts drawn in broken line are not supplied as spares.

Available spares

Disc (packet of 3)	**3**

How to order spares
Always order spares by using the description given in the column headed 'Available spares' and state the size and type of trap.
Example: 1 - Packet of 3 discs for a Spirax Sarco ½" BRoil compressed air drain trap screwed BSP.

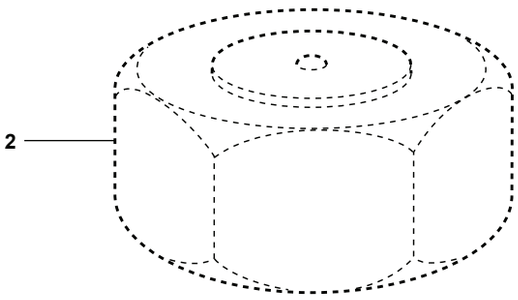

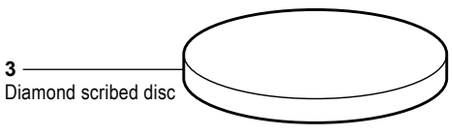

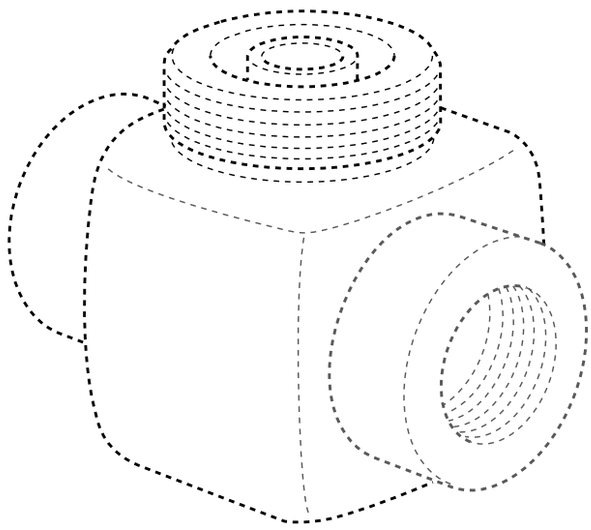

Recommended tightening torques

Item	A/F mm	N m
2	36	135 - 150
5	24	30 - 40
6	11	5 - 8

spirax sarco

TI-P610-03
ST Issue 5

BRair
Compressed Air Drain Trap

Description

The BRair is a thermodynamic type compressed air drain trap, specifically for use on railway rolling stock (British Rail Cat. no. 61/41955). The external body surfaces have electroless nickel preparation (ENP) which is oxidation resistant.

Standards

This product fully complies with the requirements of the European Pressure Equipment Directive 97/23/EC.

Certification

This product is available with a manufacturer's Typical Test Report for the body and cap as standard and EN 10204 3.1 if specified at the time of order placement.

Note: All certification/inspection requirements must be stated at the time of order placement.

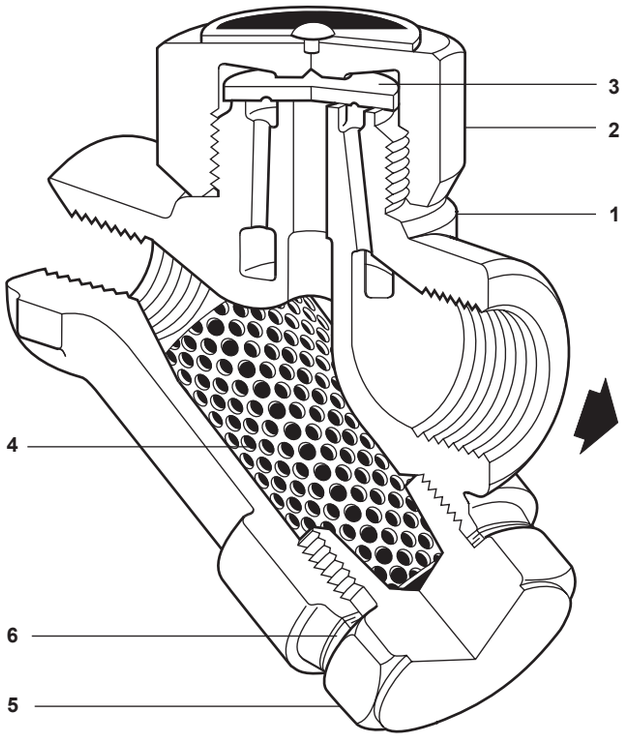

Sizes and pipe connections

½" screwed NPT, BSP and ISO 228-1.

Pressure/temperature limits

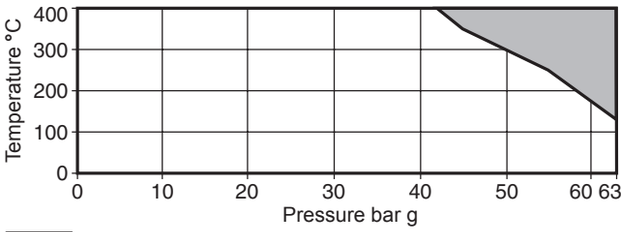

This product **must not** be used in this region.

Body design conditions		PN63
PMA	Maximum allowable pressure	63 bar g @ 120°C
TMA	Maximum allowable temperature	400°C @ 42 bar g
Minimum allowable temperature		0°C
PMO	Maximum operating pressure	63 bar g
TMO	Maximum operating temperature	400°C @ 42 bar g
Minimum operating temperature		0°C
PMOB	Maximum backpressure should not exceed 80% of the inlet pressure under any conditions of operation otherwise the trap may not shut-off.	
ΔPMN	Minimum operating differential pressure for satisfactory operation	0.25 bar
Designed for a maximum cold hydraulic test pressure of 95 bar g		

Material

No.	Part	Material	
1	Body	Stainless steel	ASTM A743 Gr. CA40F
2	Cap	Stainless steel	AISI 416
3	Disc	Stainless steel	BS 1449 420 S45
4	Strainer screen	Stainless steel	BS 1449 304 S16
5	Strainer cap	Stainless steel	AISI 416
6	Strainer cap gasket	Stainless steel	BS 1449 304 S16

Capacities

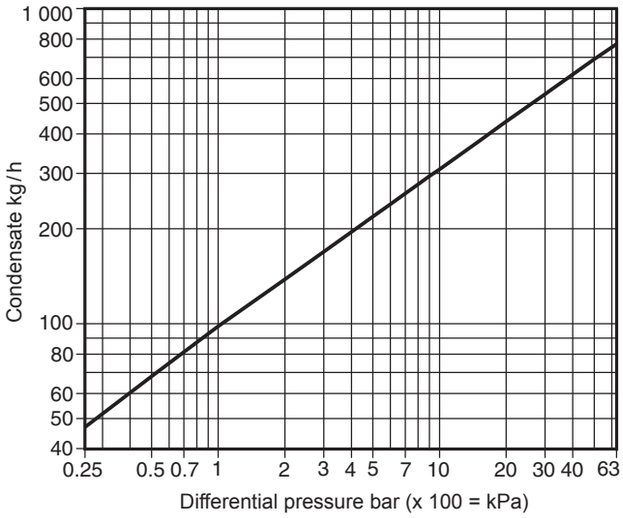

K_V values

Size	½"
K_V	3.09

For conversion: C_V (UK) = K_V x 0.963 C_V (US) = K_V x 1.156

Dimensions / weight (approximate) in mm and kg

Size	A	B	E	G	H	Weight
½"	41	78	55	85	41	0.77

5.5
10

Withdrawal distance for cap

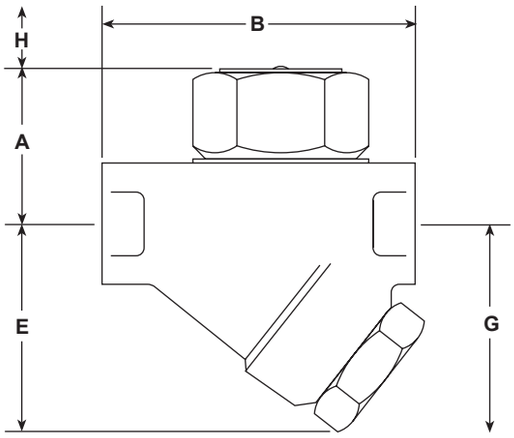

Withdrawal distance for strainer

Safety information, installation and maintenance

For full details see the Installation and Maintenance Instructions (IM-S48-06) supplied with the product.

Installation note:
Preferably fitted in a horizontal plane with the cover at the top but can be fitted in vertically downwards pipe.

Disposal
The product is recyclable. No ecological hazard is anticipated with disposal of this product providing due care is taken.

How to order

Example: 1 off Spirax Sarco ½" BRair compressed air drain trap having screwed BSP connections.

Spare parts

The spare parts available are shown in heavy outline. Parts drawn in broken line are not supplied as spares.

Available spares

Disc (packet of 3)	**3**
Strainer screen and gasket	**4, 6**
Strainer cap gasket (packet of 3)	**6**

How to order spares
Always order spares by using the desciption given in the column headed 'Available spares' and state the size and type of trap.
Example: 1 - Strainer screen for a Spirax Sarco ½" Brair compressed air drain trap.

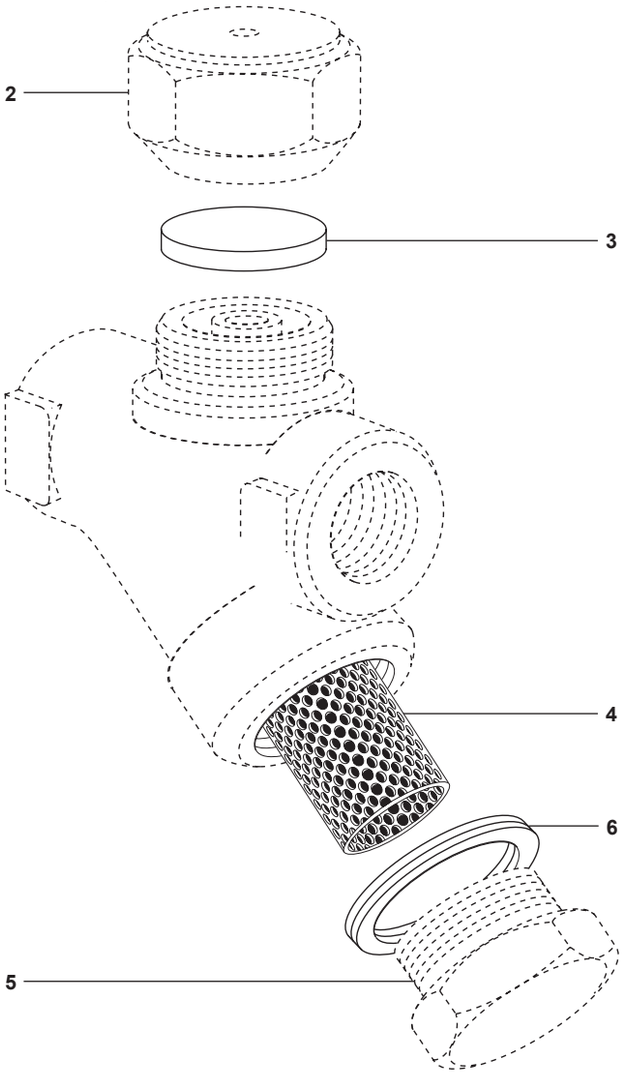

Recommended tightening torques

Item	mm	or		N m
2	36			150
5	32		M28	170 - 190

spirax sarco

TI-P504-23
CH Issue 2

Dri-Line Mk3
Monnier
Compressed Air Drain Trap

Description
The Monnier Dri-Line Mk3 is an automatic float actuated drain used to drain air line drain legs and filters.
It is a normally open valve that is rated for use up to 17 bar g and 80°C. The valve is held closed by line pressure.
The pilot valve is never submerged in water, and its discharge is operated by system air pressure, producing a strong on-off action. The float which is extremely light, can't leak or hold fluid. All parts are corrosion proof.
The unit has a manual override to check proper functioning. Discharge is easily piped to remote locations. When the compressed air system is shut down, the valve returns to its normally open condition and water will drain away by gravity.

Principal features:
- Blast action discharge.
- High discharge capacity.
- Built-in strainer screen.
- Discharge can be piped to drain.
- Black anodised finish - internal and external.

Sizes and pipe connections
½" screwed BSP (BS 21 - Rp).

Optional extras
Discharge tube adaptor: to accept 5/16" o/d copper or plastic tube to discharge condensate to drain facility.

Operating limits

Maximum working pressure	17 bar g
Minimum operating pressure	0.1 bar g
Maximum working temperature	80°C
Maximum discharge capacity	20 L/h @ 6 bar

Materials

No.	Part	Material	
1	Body	Anodised aluminium	LM25WP
2	Autodrain mechanism	Acetal plastic / Stainless steel	
3	Strainer screen	0.8 mm perforated	316L
4	'O' ring	Nitrile	

Dimensions/weights (approximately) in mm and kg

Size	A	B	G	Weight
½"	64	81	⅛" NPTF	0.46

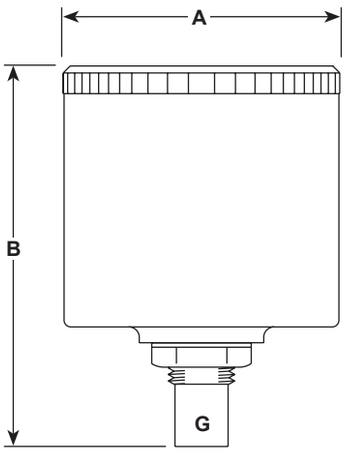

Local regulations may restrict the use of this product to below the conditions quoted.
In the interests of development and improvement of the product, we reserve the right to change the specification without notice.

Safety information, installation and maintenance

For full details see the Installation and Maintenance Instructions (IM-P504-24) supplied with the product.

Installation note:
The Dri-Line should be fitted with the inlet port at the top, so that the float mechanism can rise and fall vertically.

Typical installations:

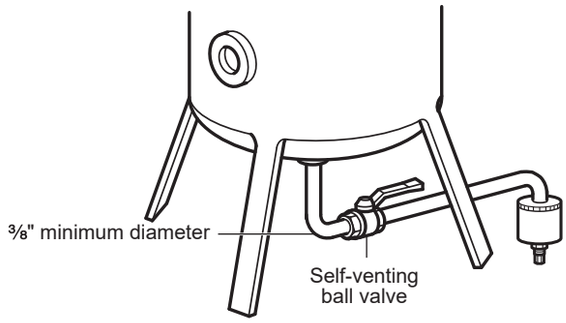

Dri-Line Mk3 draining a receiver or larger filter

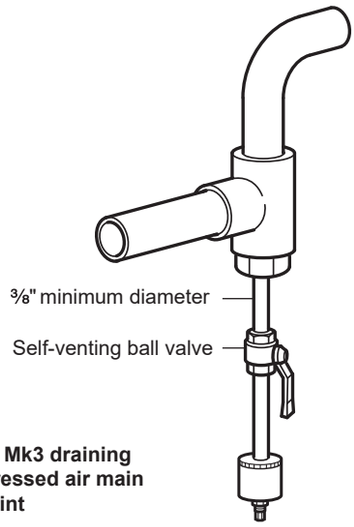

Dri-Line Mk3 draining a compressed air main relay point

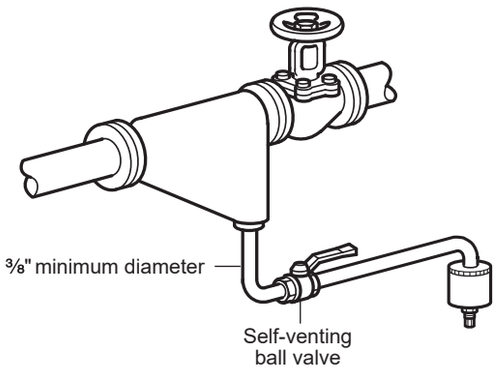

Dri-Line Mk3 draining a separator on a compressed air main

How to order

Example: 1 off Dri-Line Mk3 Monnier compressed air drain trap having a female ½" screwed BSP (BS 21 - Rp) connection.
Note: If any optional extras are required, they must be clearly specified on the order.

Spare parts

The spare parts available are detailed below. No other parts are supplied as spares.

Available spares

Internal autodrain mechanism and strainer cap 'O' ring	**A**, **B**

How to order spares
Always order spares by using the description given in the column headed 'Available spares', and state the type of trap.
Example: 1 - Internal autodrain mechanism and strainer cap 'O' ring for a Dri-Line Mk3 Monnier compressed air drain trap.